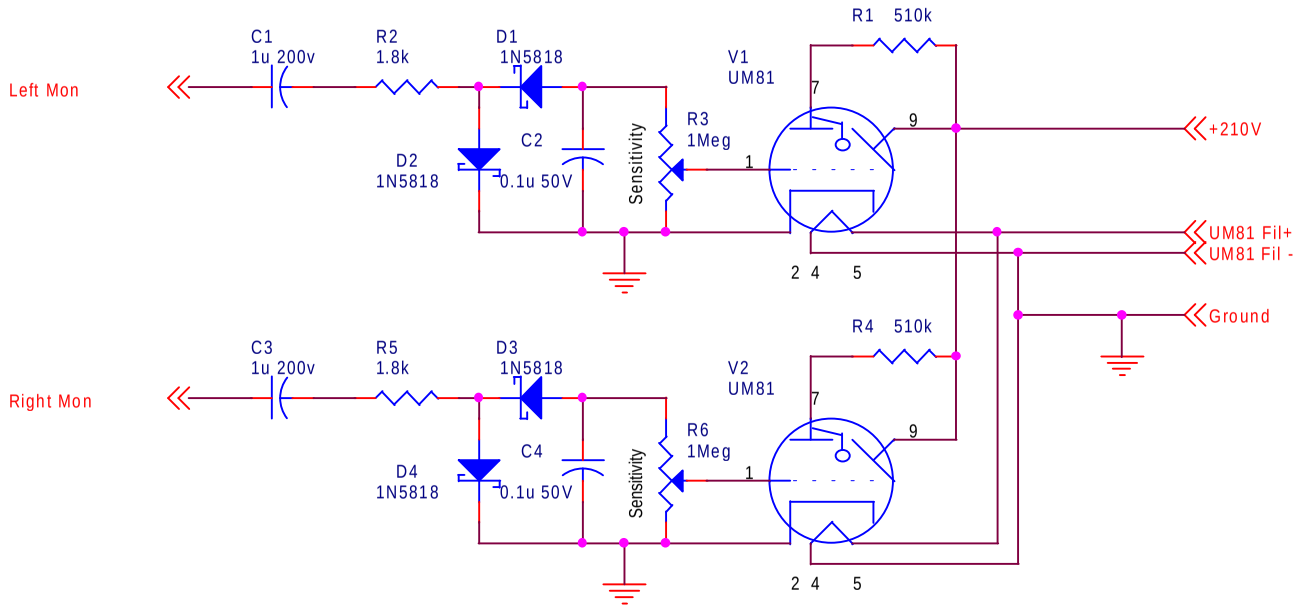

Set sensitivity for "full scale" = 20W
Note: Max sensitivity is full scale = 8 watts.

(c) Copyright 2003, Steve Bench. All Rights Reserved.

Title	Signal Indicators	
Size A	Document Number Matrix Amp	Rev A
Date: Friday, May 16, 2003	Sheet 1 of 1	