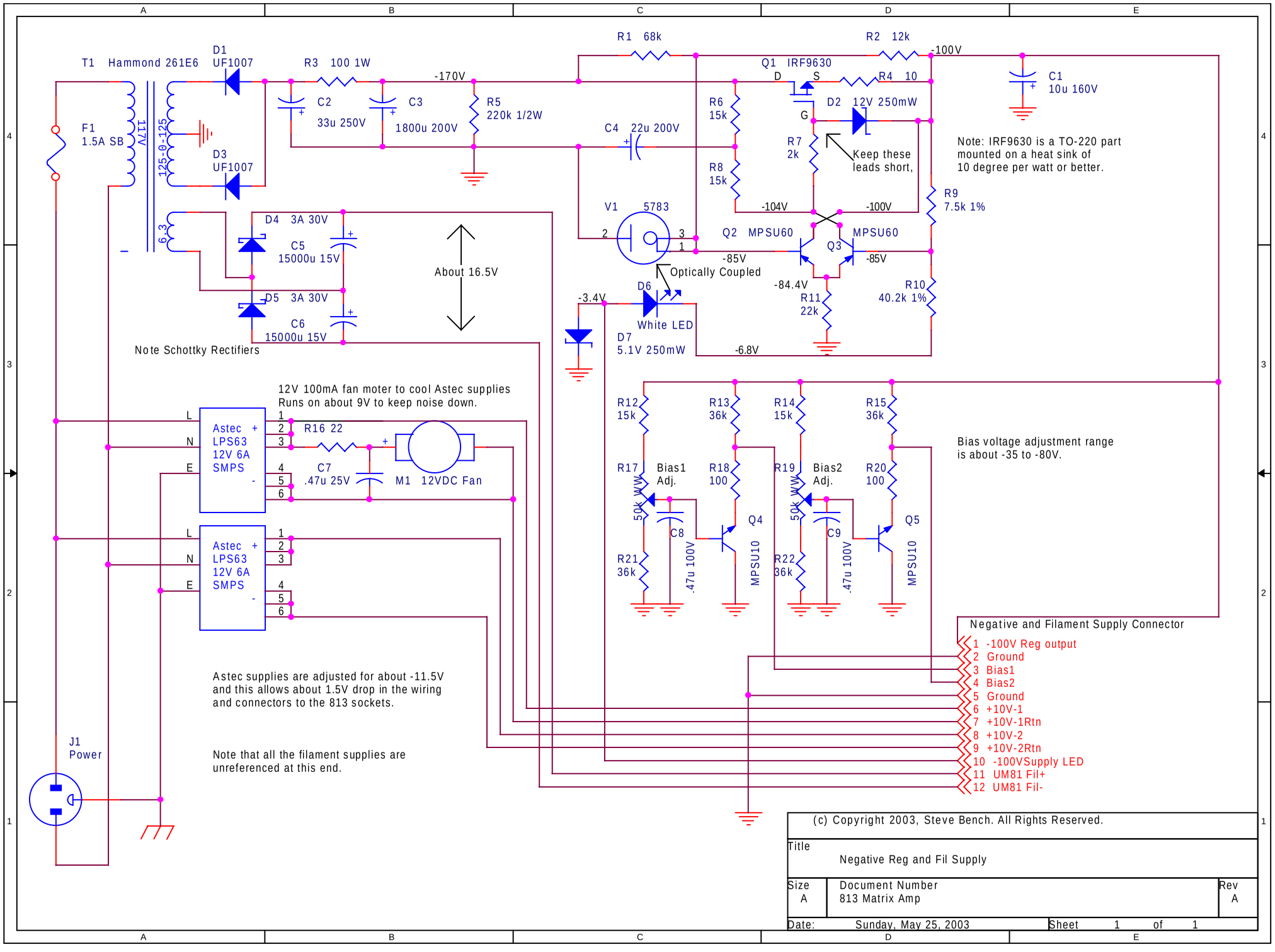
T1 Hammond 261E6
F1 1.5A SB
117V
125-0-125
6.3
D1 UF1007
D3 UF1007
R3 100 1W
C2 33u 250V
C3 1800u 200V
-170V
R5 220k 1/2W
R1 68k
C4 22u 200V
R2 12k
-100V
Q1 IRF9630
D
S
G
R4 10
D2 12V 250mW
C1 10u 160V
R6 15k
R7 2k
R8 15k
Keep these leads short,
Note: IRF9630 is a TO-220 part mounted on a heat sink of 10 degree per watt or better.
R9 7.5k 1%
V1 5783
-104V
-100V
Q2 MPSU60
Q3 MPSU60
-85V
-85V
Optically Coupled
-84.4V
R11 22k
R10 40.2k 1%
D6 White LED
-3.4V
D7 5.1V 250mW
-6.8V
D4 3A 30V
C5 15000u 15V
D5 3A 30V
C6 15000u 15V
About 16.5V
Note Schottky Rectifiers
12V 100mA fan moter to cool Astec supplies
Runs on about 9V to keep noise down.
Astec LPS63 12V 6A SMPS
R16 22
C7 .47u 25V
M1 12VDC Fan
R12 15k
R13 36k
R14 15k
R15 36k
R17 50k WW
Bias1 Adj.
R18 100
R19 50k WW
Bias2 Adj.
R20 100
R21 36k
C8 .47u 100V
Q4 MPSU10
R22 36k
C9 .47u 100V
Q5 MPSU10
Bias voltage adjustment range is about -35 to -80V.
Negative and Filament Supply Connector
1 -100V Reg output
2 Ground
3 Bias1
4 Bias2
5 Ground
6 +10V-1
7 +10V-1Rtn
8 +10V-2
9 +10V-2Rtn
10 -100VSupply LED
11 UM81 Fil+
12 UM81 Fil-
Astec supplies are adjusted for about -11.5V and this allows about 1.5V drop in the wiring and connectors to the 813 sockets.
Note that all the filament supplies are unreferenced at this end.
J1 Power
(c) Copyright 2003, Steve Bench. All Rights Reserved.
Title
Negative Reg and Fil Supply
Size A
Document Number 813 Matrix Amp
Rev A
Date: Sunday, May 25, 2003
Sheet 1 of 1