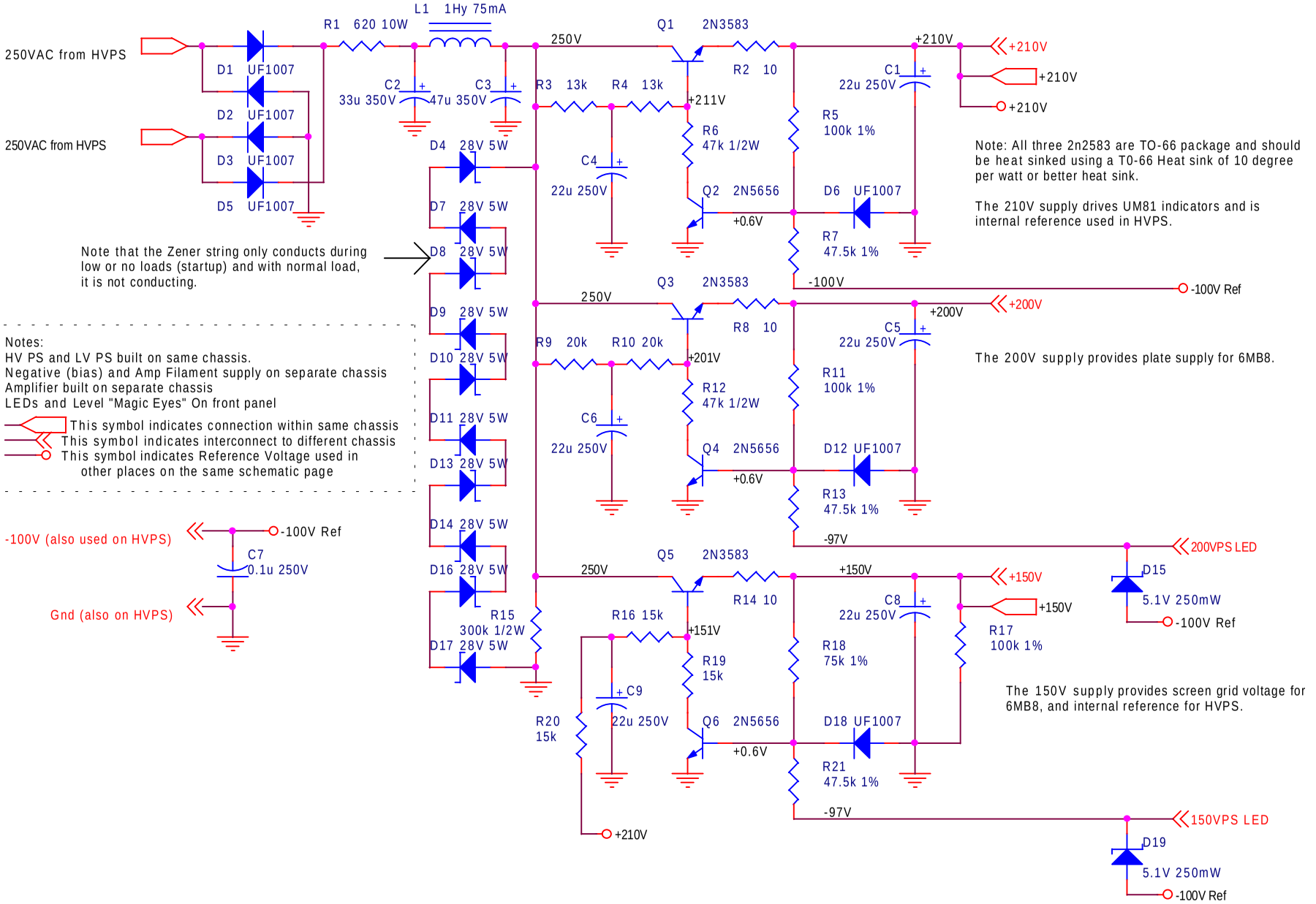

Note: All three 2n2583 are TO-66 package and should be heat sinked using a T0-66 Heat sink of 10 degree per watt or better heat sink.

The 210V supply drives UM81 indicators and is internal reference used in HVPS.

Note that the Zener string only conducts during low or no loads (startup) and with normal load, it is not conducting.

The 200V supply provides plate supply for 6MB8.

Notes:
HV PS and LV PS built on same chassis.
Negative (bias) and Amp Filament supply on separate chassis
Amplifier built on separate chassis
LEDs and Level "Magic Eyes" On front panel

This symbol indicates connection within same chassis
This symbol indicates interconnect to different chassis
This symbol indicates Reference Voltage used in other places on the same schematic page

The 150V supply provides screen grid voltage for 6MB8, and internal reference for HVPS.

(c) Copyright 2003, Steve Bench. All Rights Reserved.

Title	LV Regulators	
Size A	Document Number 813 Matrix Amp	Rev A
Date: Saturday, May 24, 2003	Sheet 1 of 1	