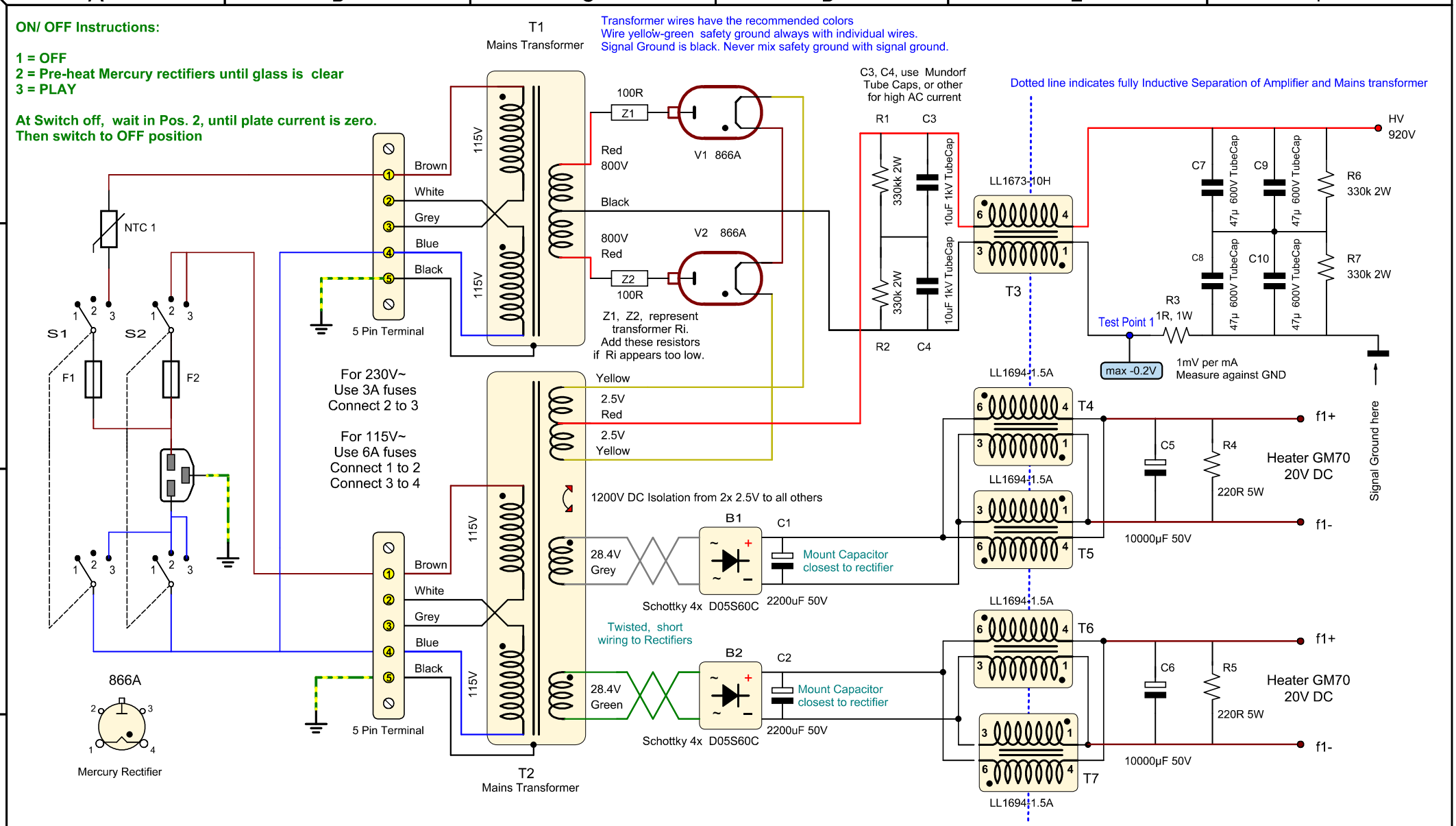

Copyright Notification

We have copyright on this schematic.
Emissionlabs is a registered brand name.

Private use if this schematic is allowed.
Internet publication, or other forms of copying or use, is only allowed with our written permission.

EMISSION LABS

Revisions			
Date	Name	Date	Name
9-Jan-2013	V1.0	08-Feb-2021	V1.4
28-Dec-2017	V1.2	24-Aug-2024	V1.5
20-Aug-2019	V1.3		

	Date	Name
Drawn	24.6.10	JW

Dipl. Ing. Jac van de Walle

JAC MUSIC

Name:
GM70 Parafeed, Amplifier Monoblock
With even harmonics cancellation

Copyright www.jacmusic.com
Drawing Nr.:

Page:
3 of 4